STEP #1 - TYPICAL PERIMETER TRIMS

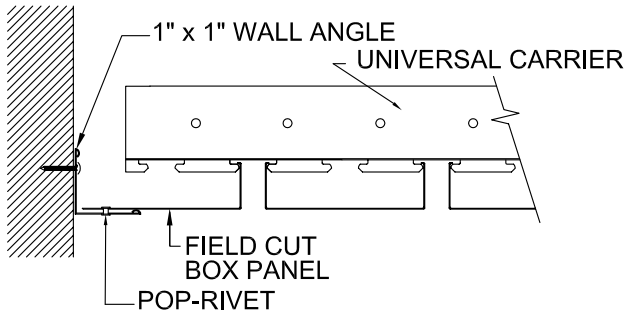

SECTION @ FIELD CUT PANEL

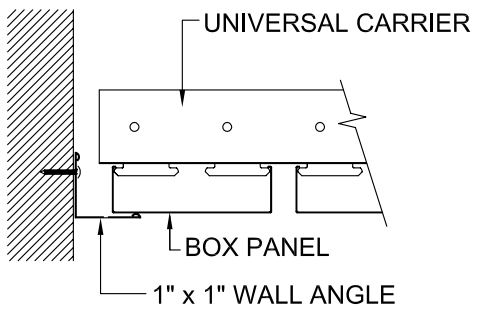

SECTION @ "FULL" PANEL

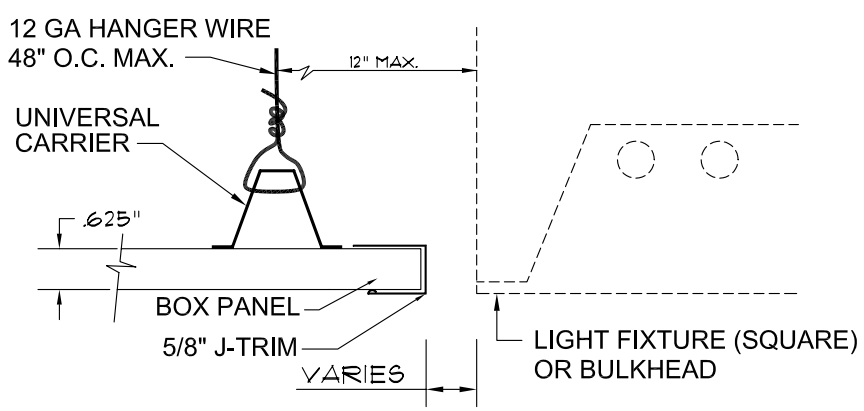

SECTION @ LIGHT OR BULKHEAD

STEP #2 - HANGER WIRE TIE DETAIL

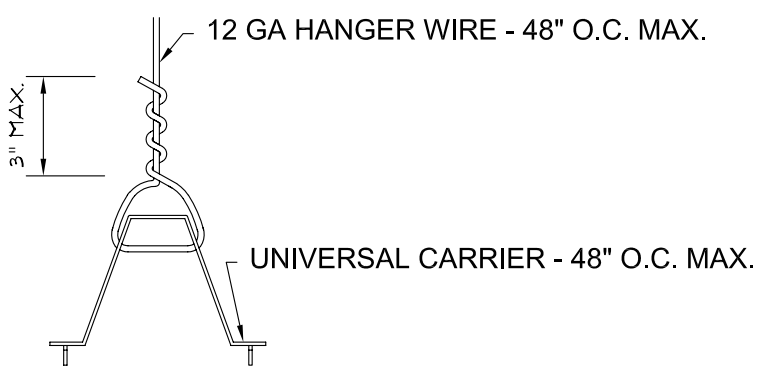

STEP #3 - PANEL INSTALLATION ISOMETRIC

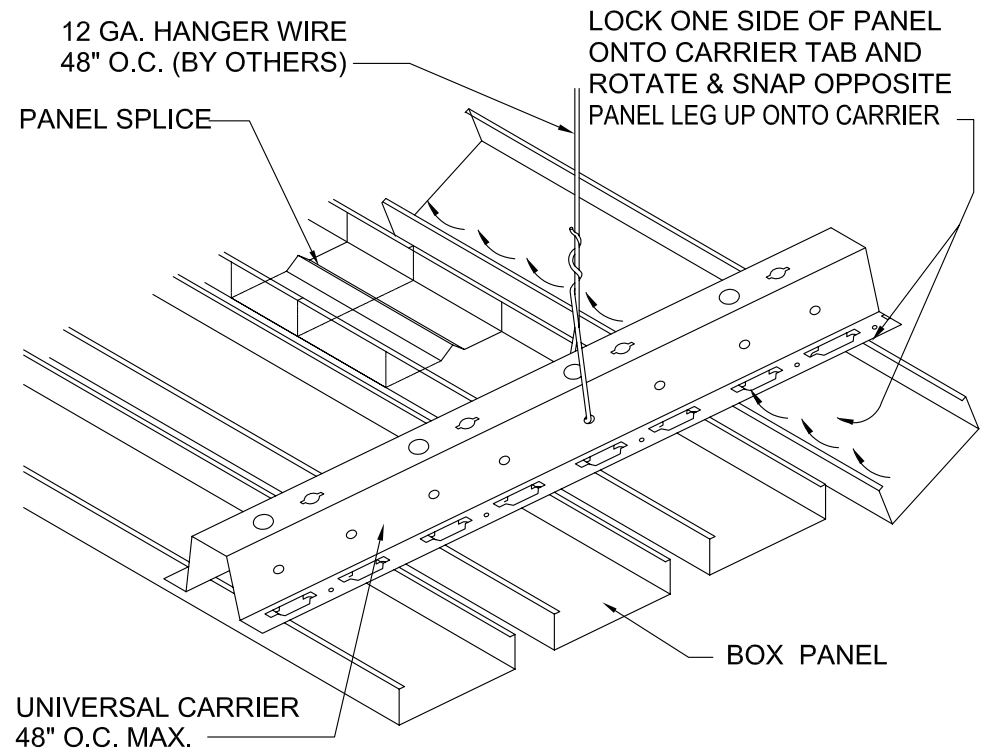

TYPICAL DOWN-LIGHT DETAIL

NOTE: LIGHT FIXTURES ARE BY OTHERS
UNLESS OTHERWISE NOTED

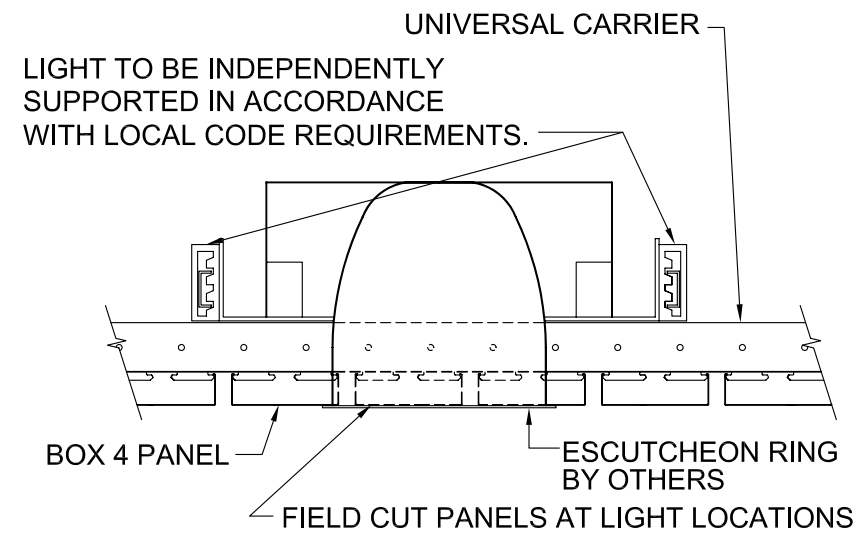

Installation instructions shown on this sheet are for INTERIOR Applications only. Please contact Hunter Douglas for ALL Exterior conditions or areas exposed to wind pressures.

STEP #4 - BOX FLAT RECESSED CLOSURE INSTALLATION

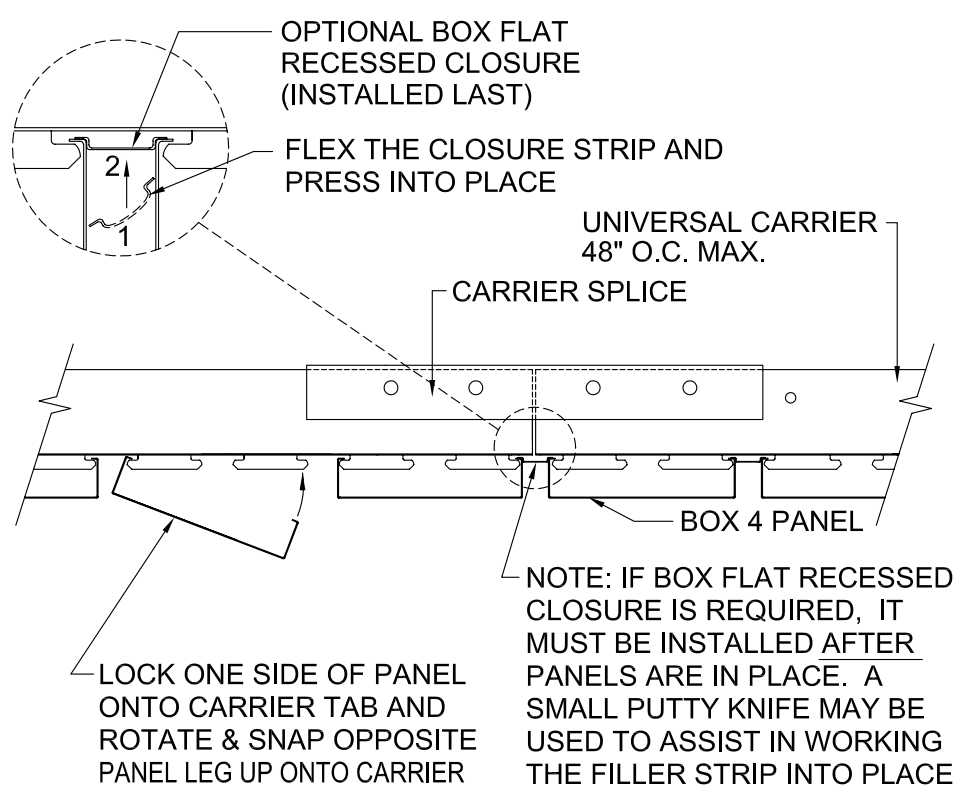

TYPICAL INSTALLATION ORDER:

STEP #1: Using a laser or level, install perimeter trim on wall.

STEP #2: Using an appropriate leveling method, install the universal carrier. This carrier should be set at 12" max from the starting wall and then 48" o.c. max. from that point. The carrier shall be suspended 12" from the wall and then 48" max. along the carrier. Minimum suspension requirements are either 12 GA hanger wire or 1/4" all-thread rod. Suspension wires are not to hang more than one and six out of plumb. Install carrier so they are level to within 1/4" in 10'-0". Hanger wires are to be wrapped around itself a minimum of three full turns (360 °) each. As the carriers are installed, pull a string perpendicular across the carrier assuring the "ear" shaped tabs are in-line. This is one of most important steps in the carrier installation process. If these are not in-line, the panel face will ripple at each carrier. All carriers must be square and in-line.

STEP#3: Typical panel length is 16'-0". If panel needs to be field cut to fit, use a power chop saw or a pair of straight snips. Panels run the opposite direction of the carriers. To install panel, raise panel up to carrier (perpendicular) and lock one side onto carrier tab. Then rotate and snap opposite panel leg onto carrier.

STEP #4: If closure strips are required, they are installed last. A small putty knife can be used to work the filler strips into place.

PAGE TITLE: Installation instructions for Box Series

LUXALON® A HunterDouglas® PRODUCT

HunterDouglas® Architectural Products, Inc.

5015 Oakbrook Parkway, S-100 / Norcross, GA 30093
Tel: 1-800-366-4327 / 770-806-9557
Fax: 770-806-0214

ALL RIGHTS RESERVED.THIS DRAWING IS THE PROPERTY OF H.D. AND MAY NOT BE COPIED OR MULTIPLIED NEITHER WHOLLY NOR PARTLY. IT MAY NOT BE SUBMITTED FOR PERUSAL TO THIRD PARTIES EITHER.

DRAWN BY:	BEN WALKER		REVISIONS	BY	DATE	DRAWING NO: BOX-SYSTEM-BOX-INSERT
DATE:	5-2-00					
SCALE:	N.T.S.					SHEET 1 OF 2

TYPICAL CARRIER LAYOUT

NOTE: PANELS NOT SHOWN IN THIS DETAIL

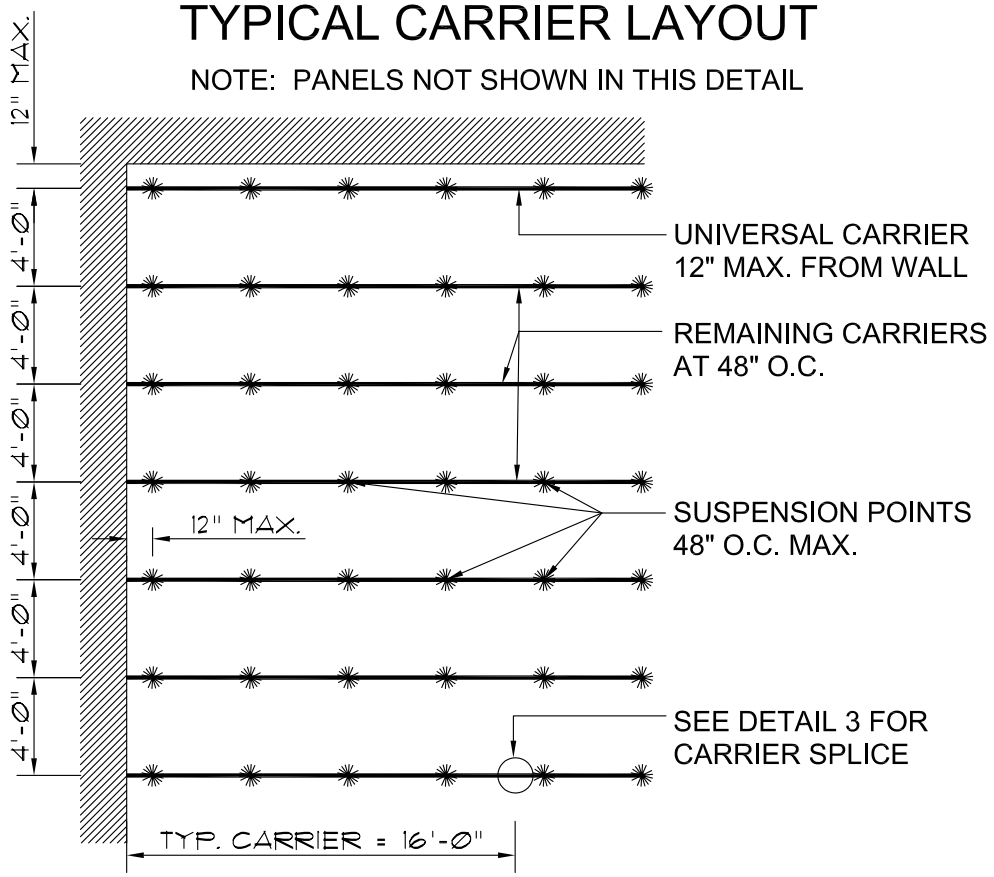

TYPICAL PANEL LAYOUT OPTIONS

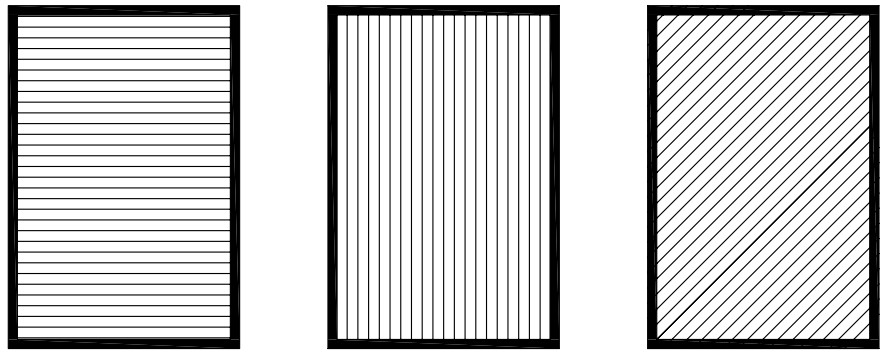

Panels running width of room

Panels running length of room

Panels running diagonal in room

TYPICAL BOX 4 SECTION DIMENSIONS

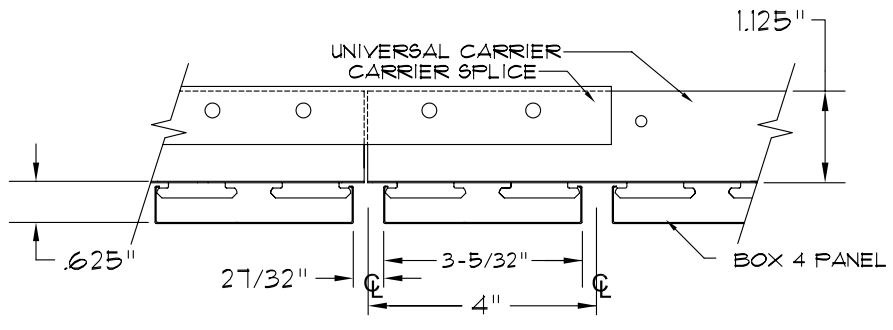

TYPICAL ISOMETRIC (FROM ABOVE CEILING SYSTEM)

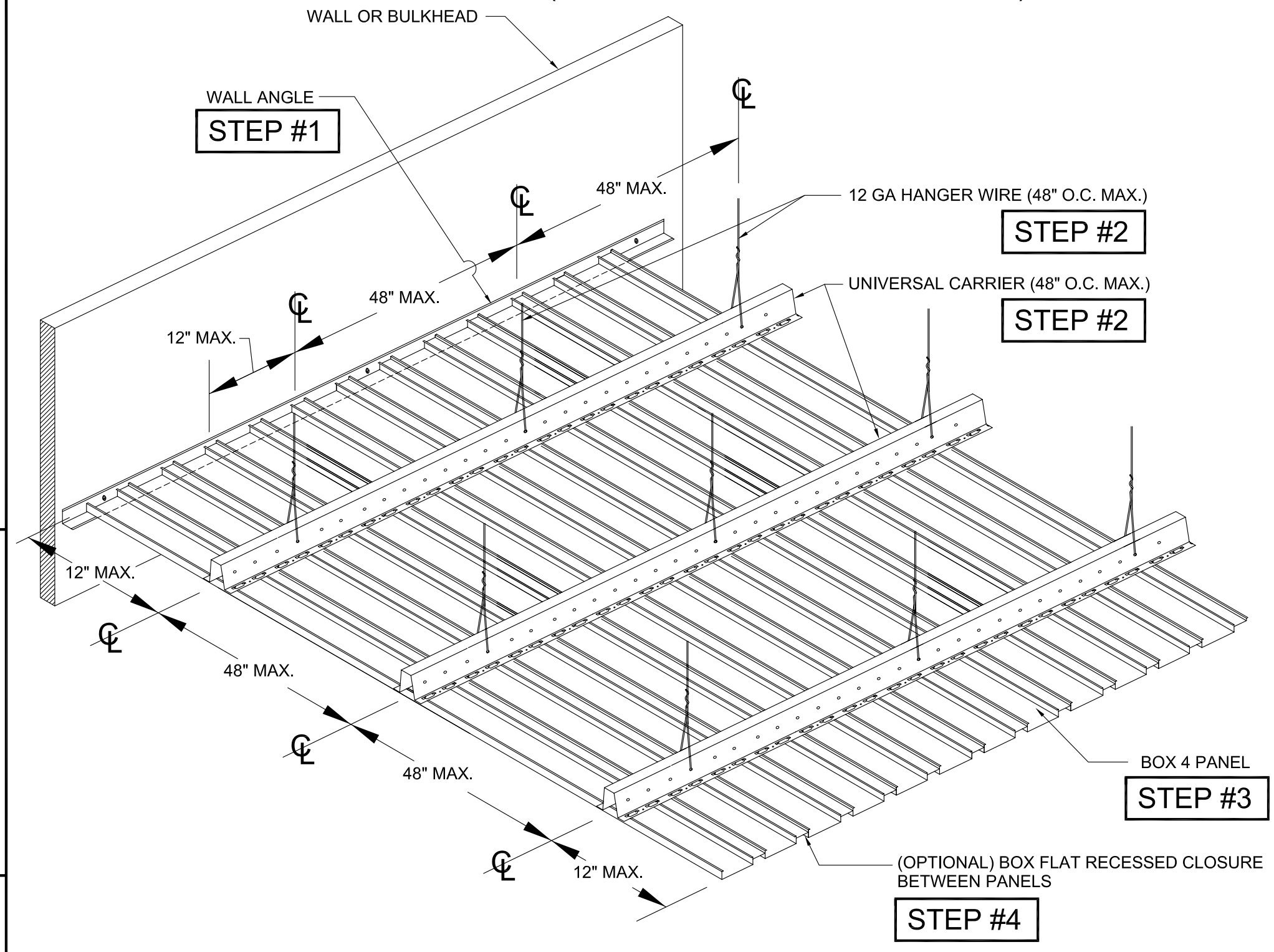

Installation instructions shown on this sheet are for INTERIOR Applications only. Please contact Hunter Douglas for ALL Exterior conditions or areas exposed to wind pressures.

PAGE TITLE: Installation instructions for Box Series

LUXALON® A HunterDouglas® PRODUCT

HunterDouglas® Architectural Products, Inc.

5015 Oakbrook Parkway, S-100 / Norcross, GA 30093
Tel: 1-800-366-4327 / 770-806-9557
Fax: 770-806-0214

ALL RIGHTS RESERVED.THIS DRAWING IS THE PROPERTY OF H.D. AND MAY NOT BE COPIED OR MULTIPLIED NEITHER WHOLLY NOR PARTLY. IT MAY NOT BE SUBMITTED FOR PERUSAL TO THIRD PARTIES EITHER.

DRAWN BY:	BEN WALKER	REVISIONS	BY	DATE	DRAWING NO: BOX-SYSTEM-BOX-INSERT
DATE:	5-2-00				
SCALE:	N.T.S.				SHEET 2 OF 2